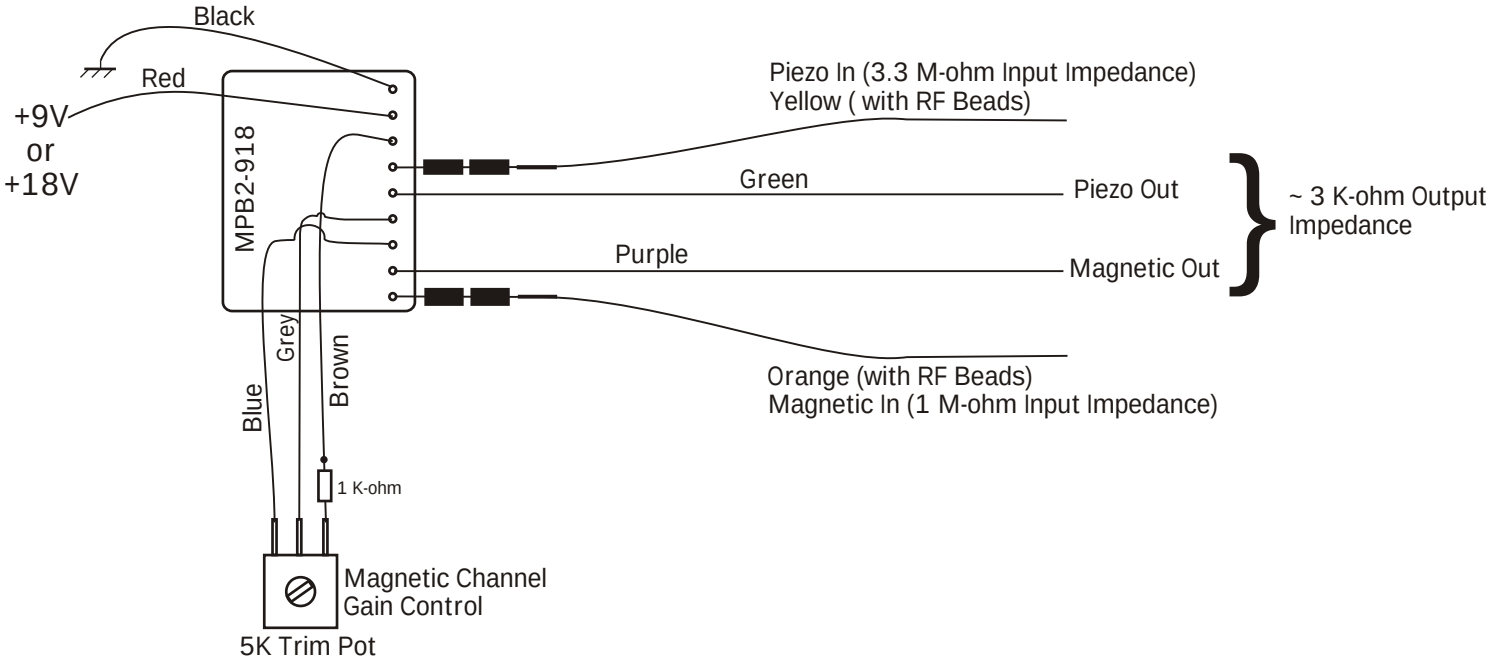

If the magnetic channel is too loud

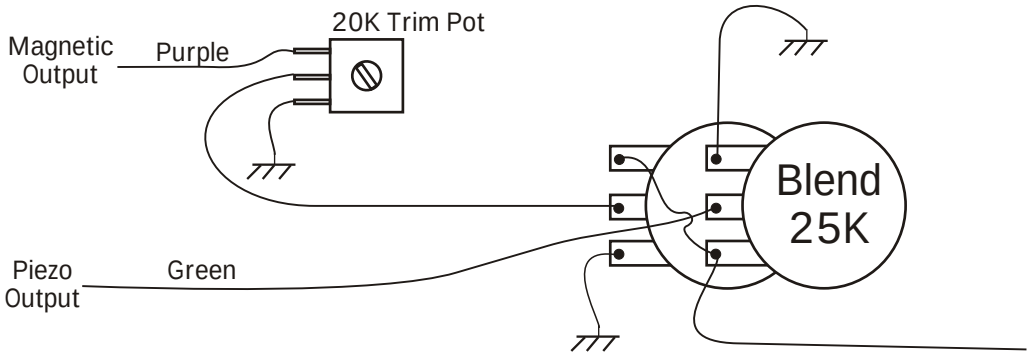

If the piezo channel is too loud

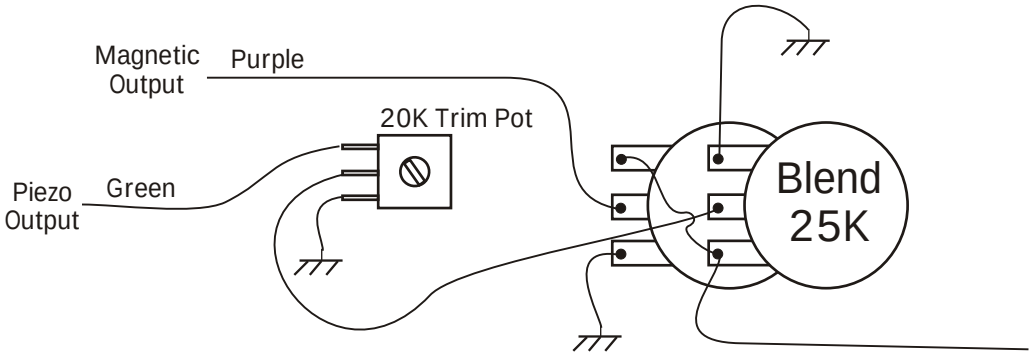

bartolini PICKUPS AND ELECTRONICS

MPB2-918

2 Magnetic Pickups & 1 Piezo Pickup with MPB2 & NTMB

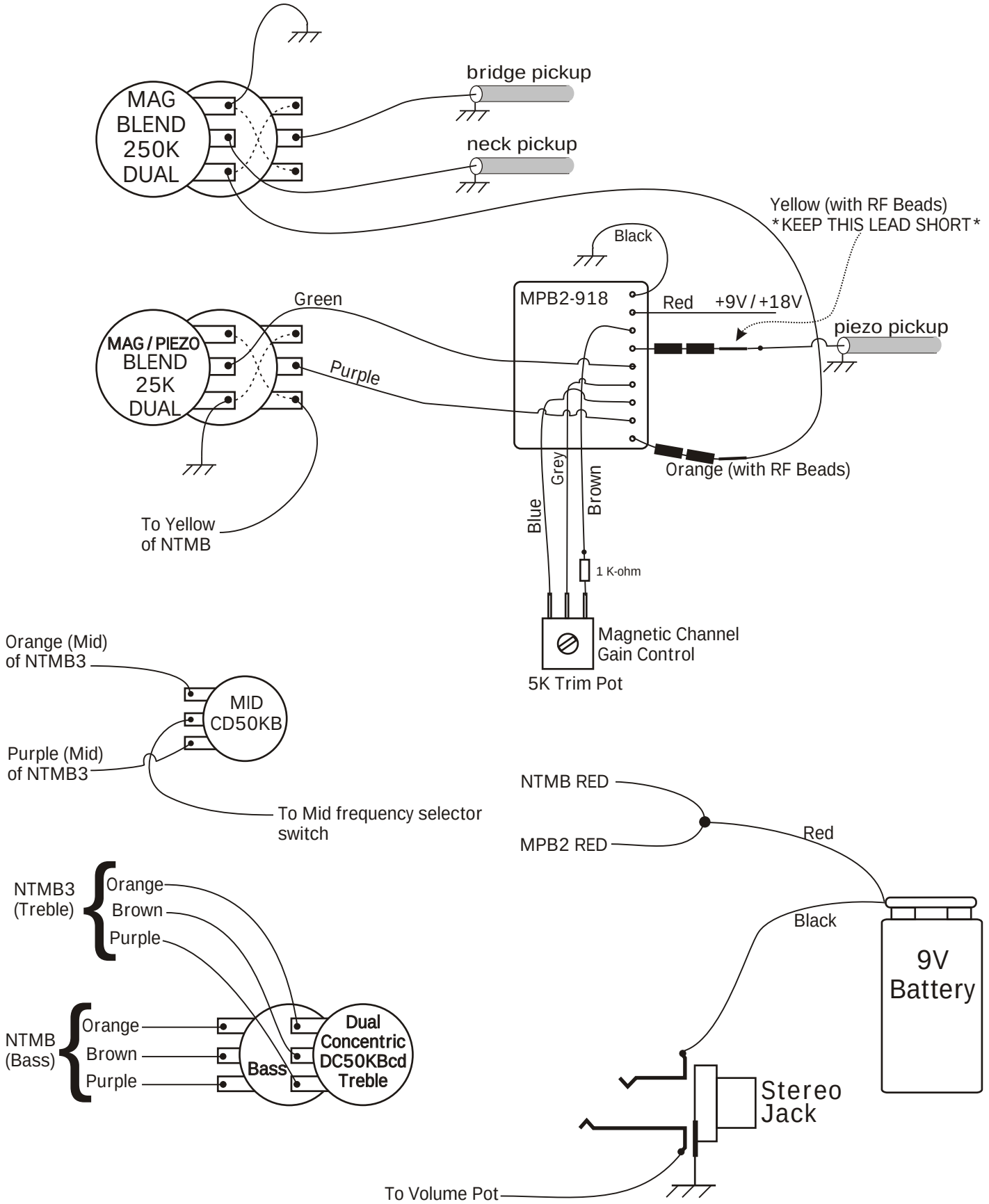

(06 / 13 / 2008) MPB2_918.cdr